TRR5104H373ALEDAC

With 1.55um MQW-FP WDM Laser Diode and PIN/TIA 1.25bps transmission

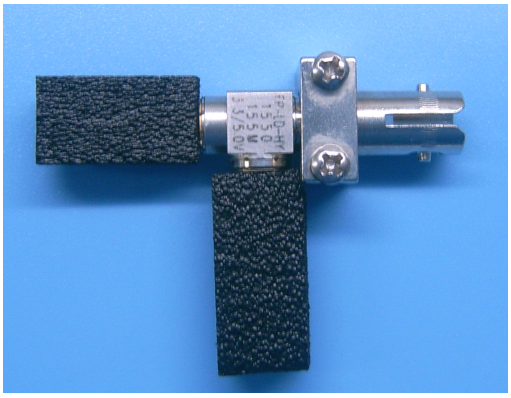

Features

- Coaxial Package
- InGaAsP/InP MQW-FP laser Diode
- Low threshold, high slope efficiency and high output power
- Operating Case temperature: -40℃ to +85℃
- singe -mode fiber-stub with SC、 FC、 ST or LC connector
- Low return loss

Applications

- Long distance digital transmission system
- Cable television system
- WDM systems
- Compatible with 100M/1000Mbps

Absolute maximum ratings

Parameter	Symbol	Ratings	Unit
Storage temperature	Tstg	-40~+85	℃
Operating case temperature	Top	-40~+85	℃
Operation Relative Humidity		85	%
Forward current (LD)	IFD	150	mA
Monitor PD Reverse voltage (LD)	VrL	2	V
Monitor PD Reverse voltage (PD)	VrP	20	V
Monitor PD Reverse current (PD)	IrP	2	mA
PD Reverse Voltage	Vpd	15	V
TIA Supply Voltage	Vcc	3.3	V
Soldering temperature (<10s)	Stemp	260	℃

Electrical and optical characteristics - Transmitter

(If=Ith+20mA, Pf=0.4mW, SMF(9.5/125μm), Tc=+25+/-2°C, unless otherwise noted.)

Parameter	Symbol	Condition	Min.	Typ	Max	Unit
Threshold current	Ith	CW	3	5	10	mA
Output Power (After coupled)	Pf	CW, If=Ith+17mA	0.2	0.3	0.5	mW
Operating voltage	Vf	CW, Tc=-40~+85℃	—	1.2	1.6	V
Slope efficiency	Se	CW, Average	0.01	0.015	0.025	mW/mA
Peak wavelength	λp	CW	1530	1550	1570	nm
		CW Tc= -40～+85℃	1490		1585	
Spectral width	Δλ	CW, RMS	—	1.5	3	nm
Rise and Fall Time	tr,tf	Ib=Ith, PL=1.5mW,20～80%	—	0.1	0.25	ns
Monitor Current (PD)	Im	CW,PL=1.5mW,VRD=1V	0.05	0.2	0.6	mA
Dark Current (PD)	Id	VRD=10V	—	—	0.01	uA
Capacitance (PD)	Ct	VRD=10V,f=1MHz	—	10	20	pF
Connector repeatability	—	—	-1	—	1	dB
Wavelength Isolation	—	—	15	—	—	dB
RF bandpass flatness	—	—	—	—	4	dB

Electrical / Optical Specifications - Receiver

Parameter	Symbol	Min	Typ	Max	Unit	Test Condition
Operating Wavelength	λ	1100		1650	nm	
Supply Current	Icc	23		35	mA	
Saturation Power	Psat	-3	0	-	dBm	
Small-Signal Bandwidth	BW	730	812	893	MHz	
Sensitivity				-29	dBm	1.25Gbps
Output Impedance	Zo		50		Ω	Single ended

Pin Assignment

TYPE: 2

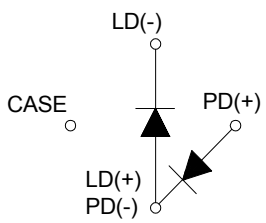

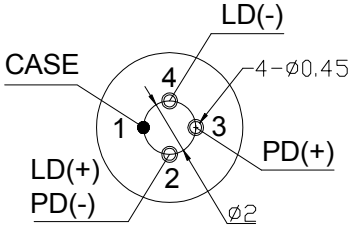

LD-pin-2 / TYPE: B

TYPE: A

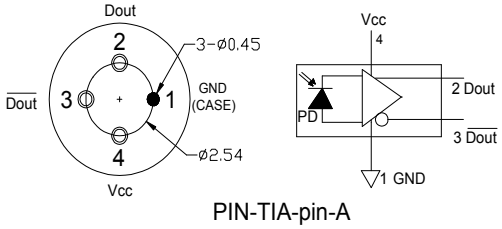

PIN-TIA-pin-A

Package dimension *Note1

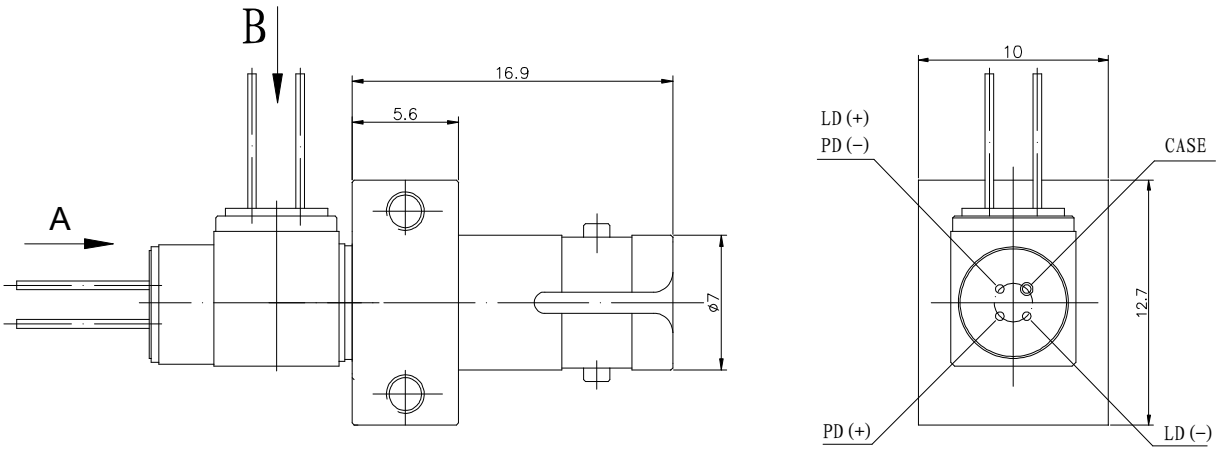

A VIEW

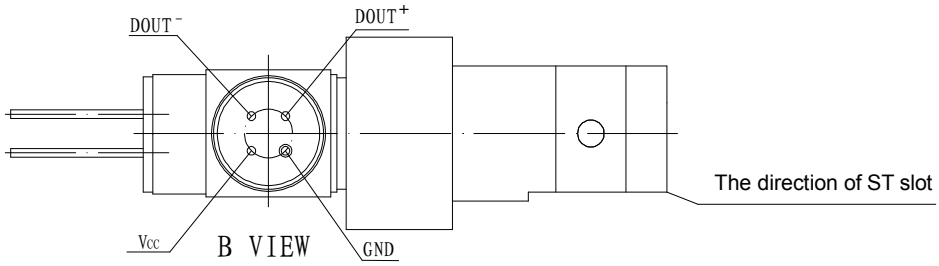

Code：U

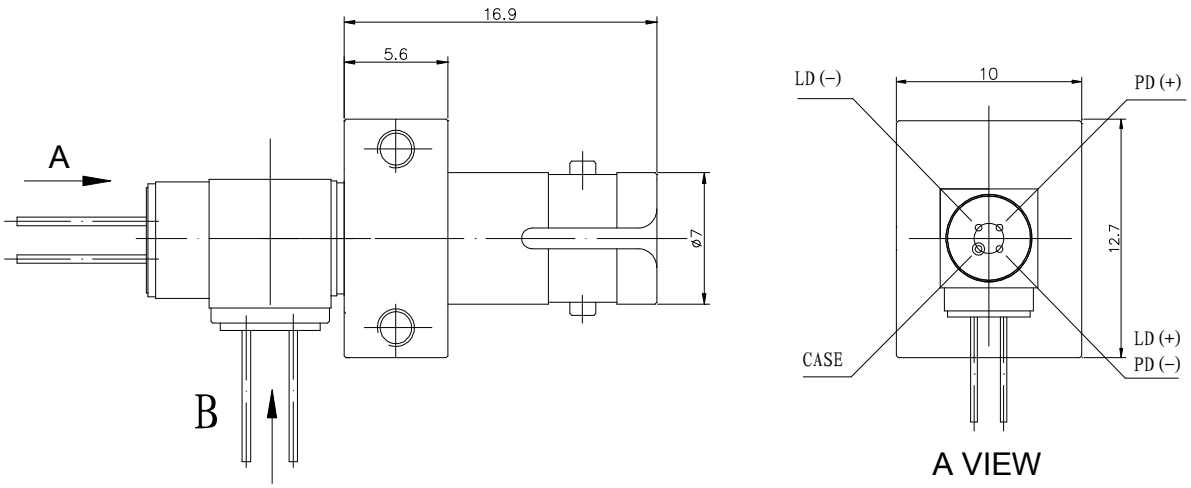

A VIEW

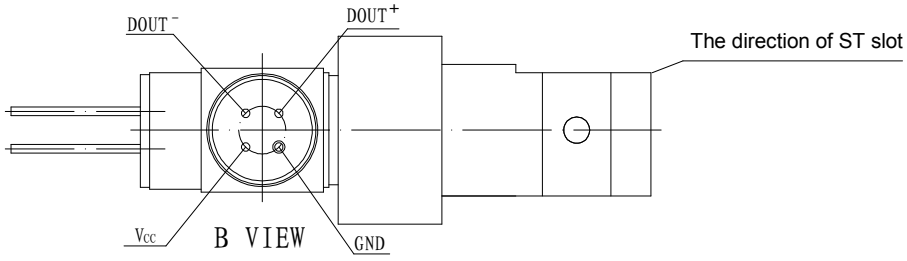

Code：D

Note1：PIN direction and laser mark can be customized.

TX Pin Order Code

Launch			
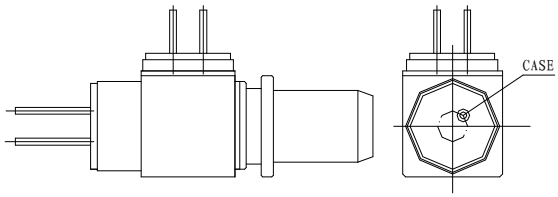		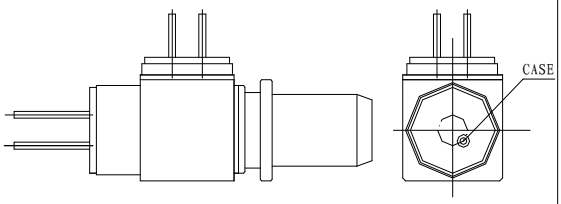	
Case direction	A Type	Case direction	B Type
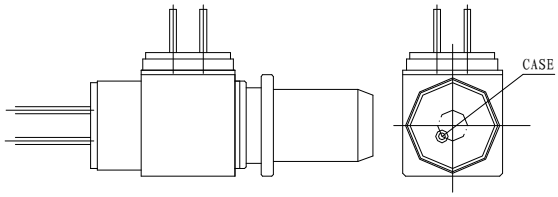		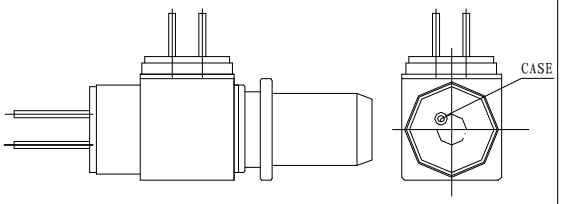	
Case direction	C Type	Case direction	D Type
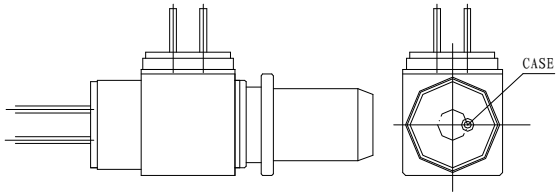		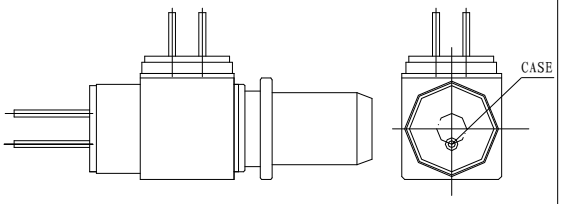	
Case direction	E Type	Case direction	F Type
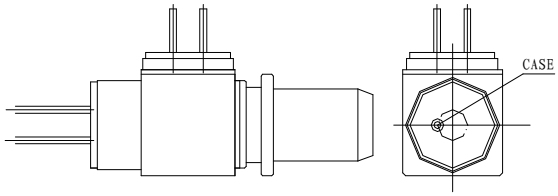		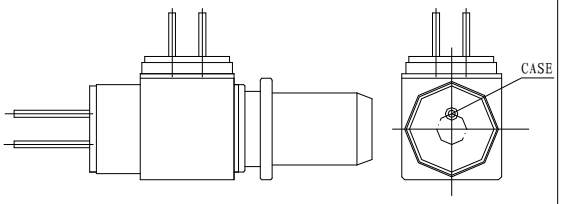	
Case direction	G Type	Case direction	H Type

1、This picture is for pluggable, pigtail BIDI chip PIN package direction's reference

2、This picture is suitable for RX Pin direction comparison .

The package direction is described as "×-×" For example "A-B", "A" is TX chip Pin direction, "B" is RX chip Pin direction.

RX Pin Order Code

Receive			
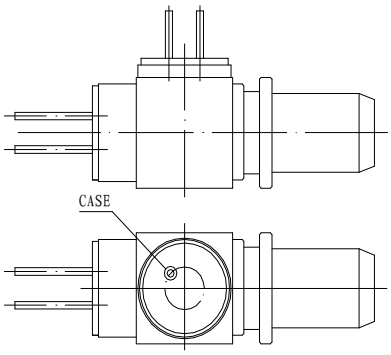		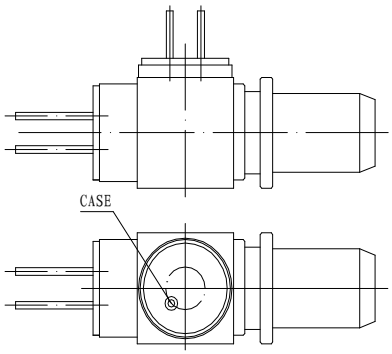	
Case direction	A Type	Case direction	B Type
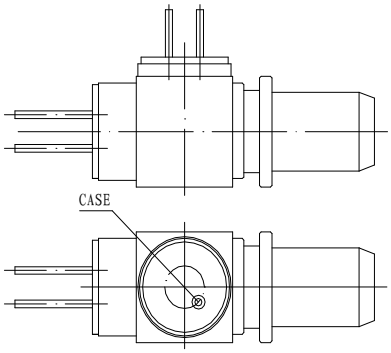		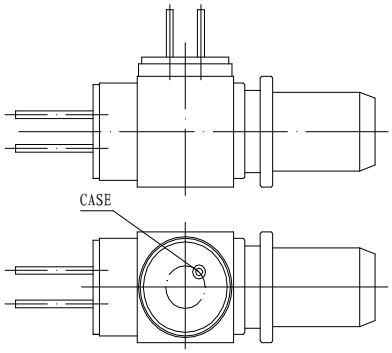	
Case direction	C Type	Case direction	D Type
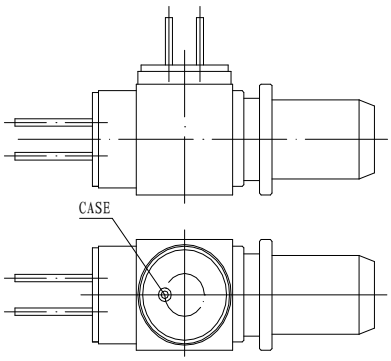		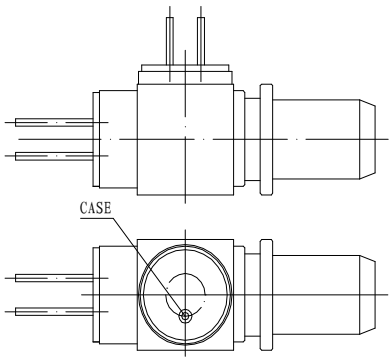	
Case direction	E Type	Case direction	F Type
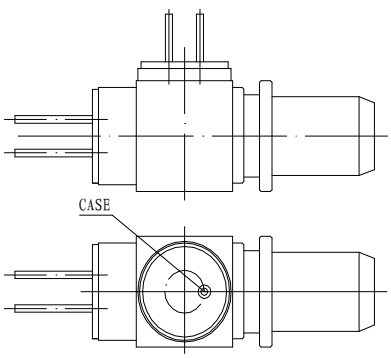		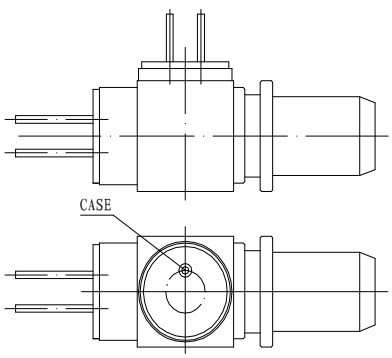	
Case direction	G Type	Case direction	H Type

Ordering information (Standard version) *Note2

Part No	Laser type	T/R	RX TO Insulated With Shell
TRR5104H373ALEDACJ	FP	15T/13R	YES

Note2: For more ordering information, please refer to nomenclature or contact EOPTOLINK sales.

TRR □ □ □ □ □ □ □ □ □ □ □ □ □ □ □ □ □ □ □

A B C D E F G H I J K L M N O P Q R

Code	Parameter	Detailed Description							
A	Laser Type	BLANK=FP LD				D=DFB LD			
B	Launch Wavelength	5=1550nm							
C	Launch Data rate	1=1.25Gbps							
D	Output Power*Note3	00=0.05~0.159			02=0.16~0.29			04=0.3~0.49	
E	TX Pin Type	1=LD-pin-1				Blank=LD-pin-2			
F	TX Chip Type	H							
G	Receiver Wavelength	3=1310nm							
H	Receiver Data rate	7=1.25G							
I	Receiver Voltage	0=3.3/5V			3=3.3V			5=5V	
J	RX Pin Type	A= pin-A							
K	RX Chip Type	L							
L	Connector	E=ST							
M	RX Direction Code	U=UP				D=DOWN			
N	TX Pin Package Direction	A	B	C	D	E	F	G	H
O	RX Pin Package Direction	A	B	C	D	E	F	G	H
P	RX TO Insulated With Shell	Blank= Insulation				N=NO Insulation			
Q	Isolator	Blank=None			G=with Ⅰ			G2=with Ⅱ	

Note3: The transmitter distance of MM BOSA 155Mbps can reach 5KM at most

Precaution

(1) The modules should be handled in the same manner as ordinary semiconductor devices to prevent the electro-static damages. For safe keeping and carrying, the modules should be packaged with ESD proof material. To assemble the modules on PCB, the workbench, the soldering iron and the human body should be grounded.

(2) Please pay special attention to the atmosphere condition because the dew on the module may cause some electrical damages.

(3) Under such a strong vibration environment as in automobile, the performance and reliability are not guaranteed.

Obtaining Document

You can visit our website:

http://www.eoptolink.com

Or contact Eoptolink Technology Inc., Ltd. listed at the end of the documentation to get the latest documentation.

Revision History

Verision	Initiated	Reviewed	Approved	Release Date
Vb-1	Yinchun, Zhao	Kelly.Cao		2011--6-11

Notice:

Eoptolink reserves the right to make changes or discontinue any product or service identified in this publication, without notice, in order to improve design and/or performance. Applications that are described herein for any of the products are for illustrative purposes only. Eoptolink makes no representation or warranty that such applications will be suitable for the specified use without further testing or modification.

Contact:

Add: Floor 5, Building 2, No. 21 Gaopeng Avenue, High-Tech District, CHENGDU, SICHUAN 610041 P.R. CHINA

Tel: (+86) 028-85122709 ext 816 & 809

Fax: (+86) 028-85121912

Postal: 610041

E-mail:sales@eoptolink.com

http://www.eoptolink.com