EOLP-1360-02

1310nm SFP+ Single-Mode
Multi Rate 600Mbps~6.25Gbps
Duplex SFP+ Transceiver
RoHS 6 Compliant

Features

- Operating data rate up to 6.25Gbps
- 1310nm FP-LD Transmitter
- Distance up to 2km
- 2-wire interface for digital diagnostic monitoring
- Single 3.3V Power supply and TTL Logic Interface
- Duplex LC Connector Interface
- Hot Pluggable
- Operating Case Temperature

  Standard: 0℃~+70℃

  Industrial: -40℃~+85℃
- Compliant with SFF-8431 and 8472
- Compliant with FC standard INCITS 352
- Compliant with IEEE 802.3ae

Applications

- High speed storage area networks
- OBSAI interface, such as

  6.144/3.072/1.536Gbps and 768Mbps
- CPRI interface, such as

  6.144/3.072/2.4576/1.228Gbps and

  614Mbps

Ordering information

Part No.	Data Rate	Laser	Fiber Type	Distance	Temp.	DDMI
EOLP-1360-02*note1	0.6~6.25Gbps	1310nm FP	SMF	2km	Standard	YES
EOLP-1360-02-I	0.6~6.25Gbps	1310nm FP	SMF	2km	Industrial	YES

Note1: Standard version.

*The product image only for reference purpose.

Regulatory Compliance*

Product Certificate	Certificate Number	Applicable Standard
TUV	R50135086	EN 60950-1:2006+A11+A1+A12+A2
		EN 60825-1:2014
		EN 60825-2:2004+A1+A2
UL	E317337	UL 60950-1
		CSA C22.2 No. 60950-1-07
EMC CE	AE 50285865 0001	EN 55022:2010
		EN 55024:2010
FCC	WTF14F0514417E	47 CFR PART 15 OCT., 2013
FDA	/	CDRH 1040.10
ROHS	/	2011/65/EU

*The above certificate number updated to June 2014, because some certificate will be updated every year, such as FDA and ROHS. For the latest certification information, please check with Eoptolink.

Product Description

This module is designed for single mode fiber and operates at a nominal wavelength of 1310 nm. The transmitter section uses a 1310nm FP laser and is a class 1 laser compliant according to International Safety Standard IEC-60825.

The receiver section uses an integrated InGaAs detector preamplifier (IDP) mounted in an optical header and a limiting post-amplifier IC.

Absolute Maximum Ratings

Parameter	Symbol	Min.	Max.	Unit
Storage Temperature	T_S	-40	+85	°C
Supply Voltage	V_{CC}	-0.5	3.6	V

Recommended Operating Conditions

Parameter	Symbol		Min.	Typical	Max.	Unit
Operating Case Temperature	T_C	EOLP-1360-02	0		+70	°C
		EOLP-1360-02-I	-40		+85	
Power Supply Voltage	V_{CC}		3.15	3.3	3.45	V
Power Supply Current	I_{CC}				300	mA
Surge Current	I_{Surge}				+30	mA
Data Rate			0.6		6.25	Gbps

Performance Specifications – Electrical

Parameter	Symbol	Min.	Typ.	Max	Unit	Notes
Transmitter						
CML Inputs(Differential)	Vin	150		1200	mVpp	AC coupled inputs
Input Impedance (Differential)	Zin	85	100	115	ohm	Rin > 100 kohms @ DC
Tx_DISABLE Input Voltage – High		2.0		3.45	V	
Tx_DISABLE Input Voltage – Low		0		0.8	V	
Tx_FAULT Output Voltage – High		2.0		Vcc+0.3	V	Io = 400μA; Host Vcc
Tx_FAULT Output Voltage – Low		0		0.5	V	Io = -4.0mA
Receiver						
CML Outputs (Differential)	Vout	350		700	mVpp	AC coupled outputs
Output Impedance (Differential)	Zout	85	100	115	ohm	
Rx_LOS Output Voltage – High		2.0		Vcc+0.3	V	Io = 400μA; Host Vcc
Rx_LOS Output Voltage – Low		0		0.8	V	Io = -4.0mA
MOD_DEF (2:0)	VoH	2.5			V	With Serial ID
	VoL	0		0.5	V	

Performance Specifications – Optical

Parameter		Symbol	Min.	Typical	Max.	Unit
9μm Core Diameter SMF Supported Distance					2	km
Data Rate			0.6		6.25	Gbps
Transmitter						
Centre Wavelength		λ_C	1260	1310	1360	nm
Spectral Width (RMS)		$\Delta\lambda$			3	nm
Average Output		P_{out}	-8.2		0.5	dBm
Extinction		ER	4.5	6		dB
Average Power of OFF Transmitter		P_{off}			-30	dBm
Input Differential Impedance		Z_{IN}	90	100	110	Ω
TX Disable	Disable		2.0		Vcc+0.3	V
	Enable		0		0.8	
TX Fault	Fault		2.0		V_{CC}+0.3	V

	Normal		0		0.8	
TX Disable Assert Time		t_off			10	us
Receiver						
Centre Wavelength		λ	1260		1360	nm
Sensitivity @ 6.25Gbps		P_{min}			-14.4	dBm
Sensitivity @ 4.95Gbps					-17	
Sensitivity @ 2.5Gbps					-20	
Sensitivity @ 1.25Gbps					-22	
Receiver Overload		P_{max}	0.5			dBm
Optical Return Loss		ORL			-12	dB
LOS De-Assert		LOS_D			-16	dBm
LOS Assert		LOS_A	-28			dBm
LOS Hysteresis		LOS_H	0.5			dB
Output Differential Impedance		Z_{OUT}	90	100	110	Ω
LOS	High		2.0		V_{CC}+0.3	V
	Low		0		0.8	

SFP+ Transceiver Electrical Pad Layout

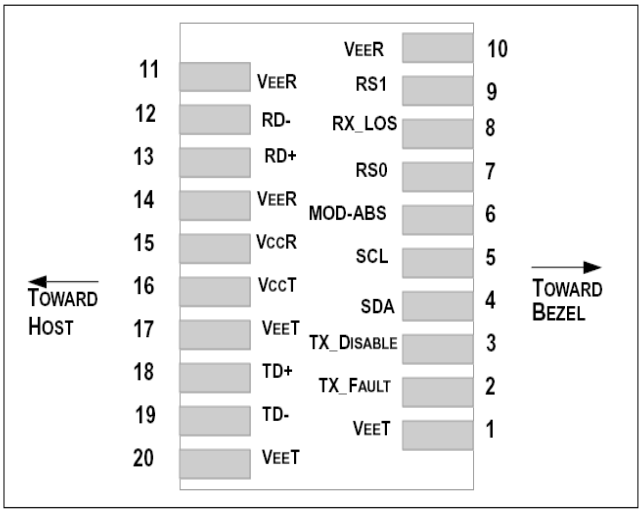

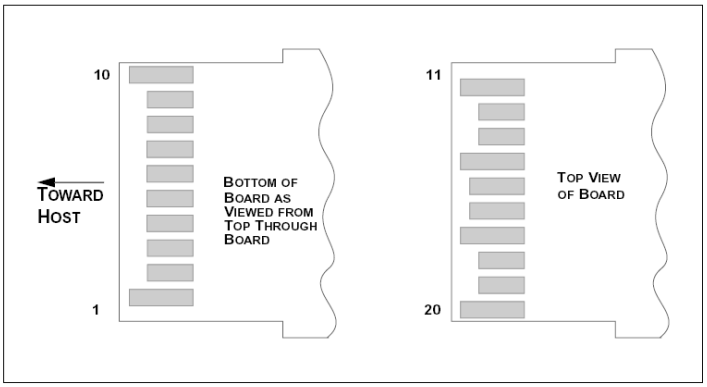

Pin Function Definitions

Pin Num.	Name	FUNCTION	Plug Seq.	Notes
1	VeeT	Transmitter Ground	1	Note 5
2	TX Fault	Transmitter Fault Indication	3	Note 1
3	TX Disable	Transmitter Disable	3	Note 2, Module disables on high or open
4	SDA	Module Definition 2	3	Data line for Serial ID.
5	SCL	Module Definition 1	3	Clock line for Serial ID.
6	MOD-ABS	Module Definition 0	3	Note 3
7	RS0	RX Rate Select (LVTTL).	3	No Function Implement
8	LOS	Loss of Signal	3	Note 4
9	RS1	TX Rate Select (LVTTL).	1	No Function Implement
10	VeeR	Receiver Ground	1	Note 5
11	VeeR	Receiver Ground	1	Note 5
12	RD-	Inv. Received Data Out	3	Note 6
13	RD+	Received Data Out	3	Note 7
14	VeeR	Receiver Ground	1	Note 5
15	VccR	Receiver Power	2	3.3V ± 5%, Note 7
16	VccT	Transmitter Power	2	3.3V ± 5%, Note 7
17	VeeT	Transmitter Ground	1	Note 5
18	TD+	Transmit Data In	3	Note 8
19	TD-	Inv. Transmit Data In	3	Note 8
20	VeeT	Transmitter Ground	1	Note 5

Notes:

1) TX Fault is an open collector/drain output, which should be pulled up with a 4.7K – 10KΩ resistor on the host board. Pull up voltage between 2.0V and VccT/R+0.3V. When high, output indicates a laser fault of some kind. Low indicates normal operation. In the low state, the output will be pulled to < 0.8V.

2) TX disable is an input that is used to shut down the transmitter optical output. It is pulled up within the module with a 4.7K – 10 KΩ resistor. Its states are:
Low (0 – 0.8V): Transmitter on
(>0.8, < 2.0V): Undefined
High (2.0 – 3.465V): Transmitter Disabled
Open: Transmitter Disabled

3) Module Absent, connected to VeeT or VeeR in the module.

4) LOS (Loss of Signal) is an open collector/drain output, which should be pulled up with a 4.7K – 10KΩ resistor. Pull up voltage between 2.0V and VccT/R+0.3V. When high, this output indicates the received optical power is below the worst-case receiver sensitivity (as defined by the standard

in use). Low indicates normal operation. In the low state, the output will be pulled to < 0.8V.

5) VeeR and VeeT may be internally connected within the SFP+ module.

6) RD-/+: These are the differential receiver outputs. They are AC coupled 100Ω differential lines which should be terminated with 100Ω (differential) at the user SERDES. The AC coupling is done inside the module and is thus not required on the host board.

7) VccR and VccT are the receiver and transmitter power supplies. They are defined as 3.3V ±5% at the SFP+ connector pin. Maximum supply current is 300mA. Recommended host board power supply filtering is shown below. Inductors with DC resistance of less than 1 ohm should be used in order to maintain the required voltage at the SFP+ input pin with 3.3V supply voltage. When the recommended supply-filtering network is used, hot plugging of the SFP+ transceiver module will result in an inrush current of no more than 30mA greater than the steady state value. VccR and VccT may be internally connected within the SFP+ transceiver module.

8) TD-/+: These are the differential transmitter inputs. They are AC-coupled, differential lines with 100Ω differential termination inside the module. The AC coupling is done inside the module and is thus not required on the host board.

EEPROM

The serial interface uses the 2-wire serial CMOS EEPROM protocol defined for the ATMEL AT24C02/04 family of components. When the serial protocol is activated, the host generates the serial clock signal (SCL). The positive edge clocks data into those segments of the EEPROM that are not writing protected within the SFP+ transceiver. The negative edge clocks data from the SFP+ transceiver. The serial data signal (SDA) is bi-directional for serial data transfer. The host uses SDA in conjunction with SCL to mark the start and end of serial protocol activation. The memories are organized as a series of 8-bit data words that can be addressed individually or sequentially.

The Module provides diagnostic information about the present operating conditions. The transceiver generates this diagnostic data by digitization of internal analog signals. Calibration and alarm/warning threshold data is written during device manufacture. Received power monitoring, transmitted power monitoring, bias current monitoring, supply voltage monitoring and temperature monitoring all are implemented. If the module is defined as external calibrated, the diagnostic data are raw A/D values and must be converted to real world units using calibration constants stored in EEPROM locations 56 – 95 at wire serial bus address A2h. The digital diagnostic memory map specific data field define as following .For detail EEPROM information, please refer to the related document of SFF 8472 Rev 10.2.

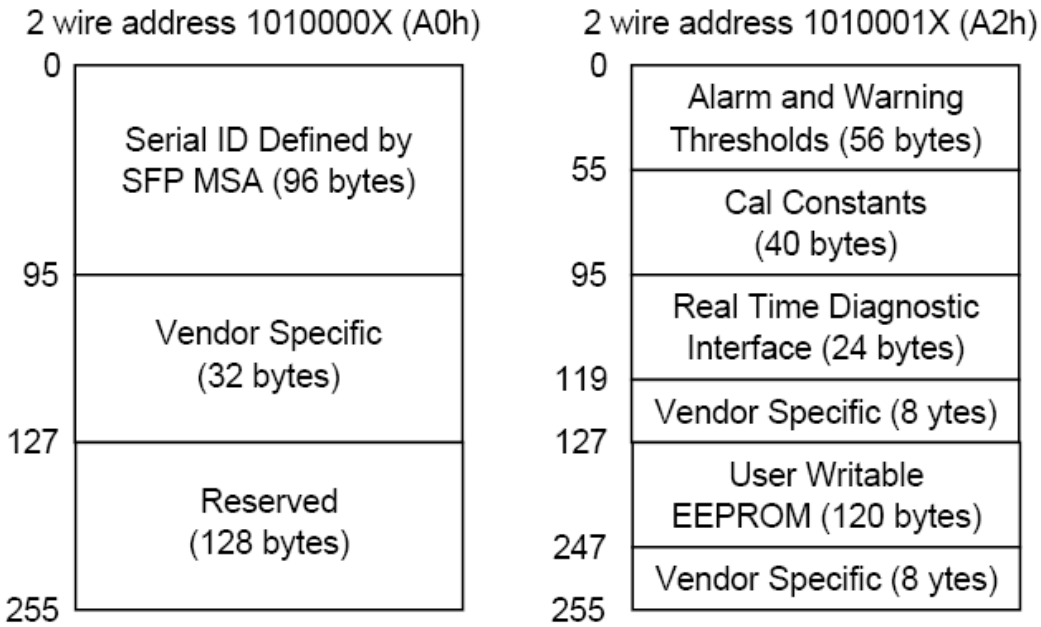

EEPROM Serial ID Memory Contents

Accessing Serial ID Memory uses the 2 wire address 1010000X (A0H). Memory Contents of Serial ID are shown in Table 1.

Table 1 Serial ID Memory Contents

Addr.	Size (Bytes)	Name of Field	Hex	Description
BASE ID FIELDS				
0	1	Identifier	03	SFP
1	1	Ext. Identifier	04	SFP function is defined by serial ID only
2	1	Connector	07	LC Connector
3-10	8	Transceiver	00 00 00 00 00 00 00 00	Undefined
11	1	Encoding	01	64B/65B
12	1	BR, Nominal	3F	6250Mbps
13	1	Reserved	00	
14	1	Length (9μm)km	02	Transceiver transmit distance
15	1	Length(9μm)100m	14	
16	1	Length (50μm) 10m	00	
17	1	Length(62.5μm)10m	00	
18	1	Length (Copper)	00	Not compliant
19	1	Reserved	00	
20-35	16	Vendor name	45 4F 50 54 4F 4C 49 4E 4B 20 20 20 20 20	EOPTOLINK

			20 20	
36	1	Reserved	00	
37-39	3	Vendor OUI	XX XX XX(Note2)	
40-55	16	Vendor PN	45 4F 4C 50 2D 31 33 36 30 2D 30 32 20 20 20 20	EOLP-1360-02
56-59	4	Vendor rev	31 2E 30 20	1.0
60-61	2	Wavelength	05 1E	1310nm
62	1	Reserved	00	
63	1	CC_BASE	Check Sum (Variable)	Check code for Base ID Fields
EXTENDED ID FIELDS				
64-65	2	Options	00 1A	TX_DISABLE, TX_FAULT and Loss of Signal implemented.
66	1	BR,max	00	
67	1	BR,min	00	
68-83	16	Vendor SN	XX XX XX XX XX XX XX XX 20 20 20 20 20 20 20 20(Note2)	Serial Number of transceiver (ASCII). For example “B000822”.
84-91	8	Date code	XX XX XX XX XX XX XX XX(Note2)	Manufactory date code. For example “080405”.
92	1	Diagnostic Monitoring Type	XX(Note2)	Digital diagnostic monitoring implemented
93	1	Enhanced Options	XX(Note2)	Optional flags
94	1	SFF-8472 Compliance	XX(Note2)	01 for diagnostics (Rev9.3 SFF-8472).
95	1	CC_EXT	Check Sum (Variable)	Check sum for Extended ID Field.
VENDOR SPECIFIC ID FIELDS				
96-127	32	Vendor Specific	Read only	Depends on customer information
128-255	128	Reserved	Read only	

Note2: The “XX” byte should be filled in according to practical case. For more information, please refer to the related document of SFP Multi-Source Agreement (MSA).

Eoptolink

Recommend Circuit Schematic

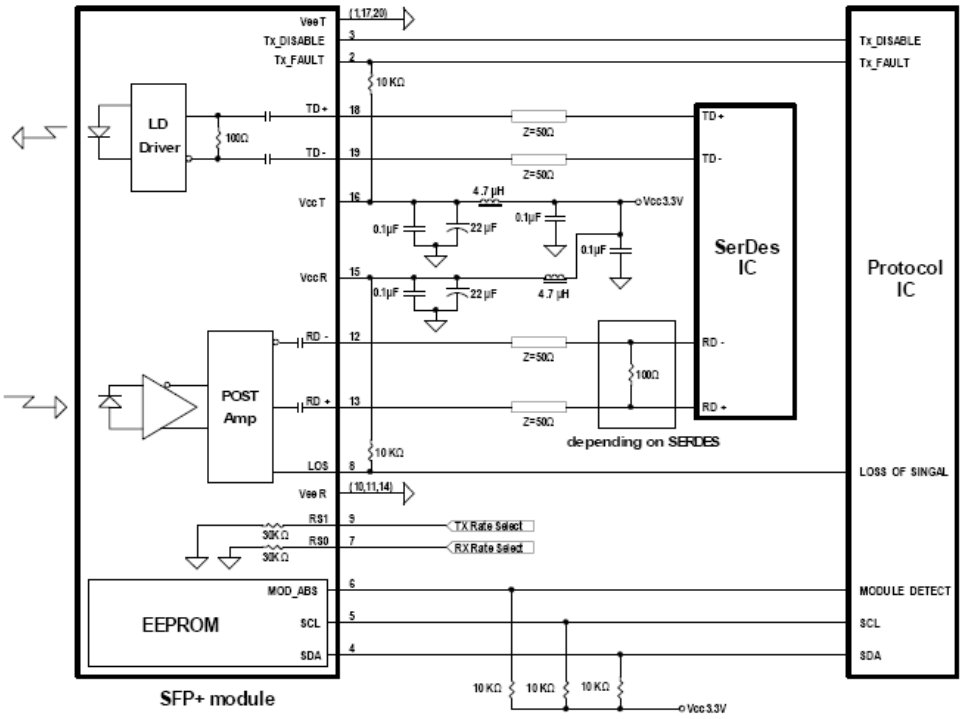

Mechanical Specifications

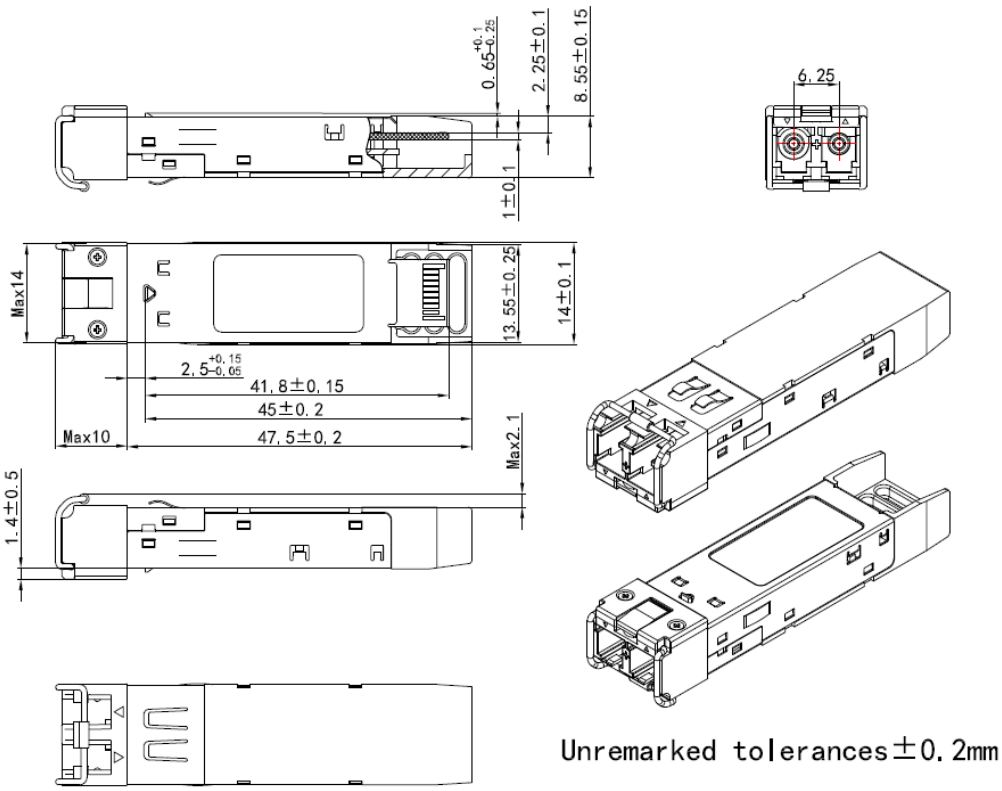

*This 2D drawing only for reference, please check with Eoptolink before ordering.

Eye Safety

This single-mode transceiver is a Class 1 laser product. It complies with IEC-60825 and FDA 21 CFR 1040.10 and 1040.11. The transceiver must be operated within the specified temperature and voltage limits. The optical ports of the module shall be terminated with an optical connector or with a dust plug.

Obtaining Document

You can visit our website:http://www.eoptolink.com
Or contact Eoptolink Technology Inc., Ltd. Listed at the end of the documentation to get the latest document.

Revision History

Revision	Initiated	Reviewed	Approved	DCN	Release Date
V1.a	Kelly.Cao			Released.	Jan 13, 2010
V1.b	Kelly.Cao			Add the application.	Dec 6, 2010
V2.0	Alex/Townie	Kelly		Update spelling mistake	Aug 10, 2011
V2.a	Kelly			Update photo.	Oct 27, 2011
V2.b	Angela	Kelly		Update regulatory compliance and ER	Oct 17, 2013
V2.c	Abby	Kelly		Correct some mistakes	Oct 8, 2014
V2.d	Angela	Kelly/Fing/JP/ Eason/William/ Chao.Wang	Phlio	Update the RS0/RS1 Pin function definition notes. Update the picture, 2D drawing and contact.	April 8, 2018
V2.e	Nico	Marvin/Eason/ Yi Wan/Kelly		Update the LOS threshold	Jun 6, 2018

Notice:

Eoptolink reserves the right to make changes to or discontinue any optical link product or service identified in this publication, without notice, in order to improve design and/or performance. Applications that are described herein for any of the optical link products are for illustrative purposes only. Eoptolink makes no representation or warranty that such applications will be suitable for the specified use without further testing or modification.

Contact:

Add: No.127 West Wulian Street, Gongxing Town, Shuangliu district, Chengdu City, Sichuan, China.
Tel: (+86) 028-67087999
Fax: (+86) 28-67087979-8010
Postal: 610213
E-mail:sales@eoptolink.com
http://www.eoptolink.com

Eoptolink