EOLP-PCT

10Gbit/s SFP+ Convert To XENPAK Transceiver

Features

- Compatible with XENPAK MSA
- Case Temperature Range:

  Standard: 0° C - 70° C
- Hot pluggable 70-pin connector with XAUI electrical interface
- Management and control via MDIO 2-wire interface
- Complaint with the EU RoHS 6 Environmental requirements

Applications

- 10GBASE-LR 10G Ethernet
- Other optical links

Eopto!

Table 1 lists the SFP+ transceiver modules that can be plugged into the Converter Module.

Product Name	Product Description
SR	850nm MM 10G SFP+
LR	1310nm SM 10G SFP+ 10KM
ER	1550nm SM 10G SFP+ 40KM
ZR	1310nm SM 10G SFP+ 70KM
CWDM	CWDM SFP+ 10G
DWDM	DWDM SFP+ 10G

Regulatory Compliance

Feature	Standard	Performance
Electrostatic Discharge (ESD) to the Electrical Pins	MIL-STD-883G Method 3015.7	Class 1C (>1000 V)
Electrostatic Discharge to the enclosure	EN 55024:1998+A1+A2 IEC-61000-4-2 GR-1089-CORE	Compliant with standards
Electromagnetic Interference (EMI)	FCC Part 15 Class B EN55022:2006 CISPR 22B :2006 VCCI Class B	Compliant with standards Noise frequency range: 30 MHz to 6 GHz. Good system EMI design practice required to achieve Class B margins. System margins depend on customer host board and chassis design.
Immunity	EN 55024:1998+A1+A2 IEC 61000-4-3	Compliant with standards. 1kHz sine-wave, 80% AM, from 80 MHz to 1 GHz. No effect on transmitter/receiver performance is detectable between these limits.
Laser Eye Safety	FDA 21CFR 1040.10 and 1040.11 EN (IEC) 60825-1:2007 EN (IEC) 60825-2:2004+A1	CDRH compliant and Class I laser product. TüV Certificate No. 50135086
Component Recognition	UL and CUL EN60950-1:2006	UL file E317337 TüV Certificate No. 50135086 (CB scheme)
RoHS6	2002/95/EC 4.1&4.2 2005/747/EC 5&7&13	Compliant with standards*note2

Note1: For update of the equipments and strict control of raw materials, EOPTOLINK has the ability to supply the customized products since Jan 1st, 2007, which meets the requirements of RoHS6 (Restrictions on use of certain Hazardous Substances) of European Union.

In light of item 5 in RoHS exemption list of RoHS Directive 2002/95/EC, Item 5: Lead in glass of cathode ray tubes, electronic components and fluorescent tubes.

In light of item 13 in RoHS exemption list of RoHS Directive 2005/747/EC, Item 13: Lead and cadmium in optical and filter glass. The three exemptions are being concerned for Eoptolink's transceivers, because Eoptolink's transceivers use glass, which may contain Pb, for components such as lenses, windows, isolators, and other electronic components.

Eoptolink

Product Description

The EOLP-PCT converts a 10 Gigabit Ethernet XENPAK port into a 10 Gigabit Ethernet SFP+ port. With the converter module, customers have the flexibility to use the 10 Gigabit XENPAK interface port of a switch with XENPAK modules or SFP+ modules. This flexibility is critical when the specific type of interface is not available in one or the other form factor or when customers want to use the same form factor for interfaces across multiple platforms deployed in their network.

It is a highly integrated, serial optical transponder module for high-speed, 10Gbit/s data transmission applications. The module is fully compliant to IEEE 802.3ae standard for Ethernet, making it ideally suited for 10GbE datacom (rack to-rack, client interconnection) applications. The transponder operates within a wide case temperature range of 0° C to +70° C and offers optimum heat dissipation and excellent electromagnetic shielding which enables high port densities for 10GbE systems. A 70 pin electrical connector and a SFP+ interface assure that connectivity is compliant to the XENPAK MSA.

Electro Static Discharge (ESD)

The maximum electrostatic charge based on a human body model and the conditions as outlined below is:

Parameter	Conditions	Symbol	Min	Typ	Max	Units
Static Discharge Voltage	MIL STD 883 Method				500	V

Thermal Management

The transponder is designed for an operation within a case temperature range between 0 to +70° C at an altitude of < 3km. The built in heatsink provides an optimized thermal performance. The user needs to guarantee per system design not to exceed this temperature range. It has to be considered that in case of usage of multiple modules on a single hostboard that there is a temperature rise among the modules hosted side by side. Airflow direction and air speed needs to be choosen accordingly. For further information it is referred to the MSA document.

Card-Edge-Connector-Pinning and Layout

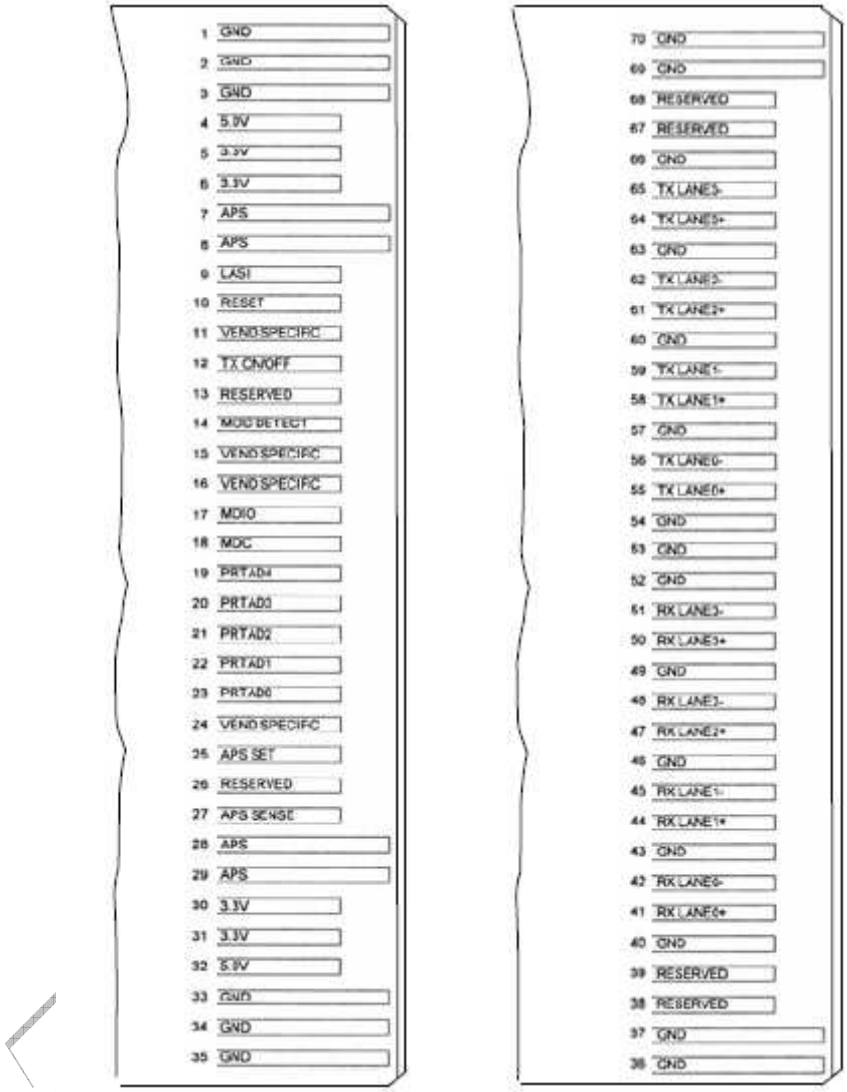

Top view -Top side Top view-Bottom row

Electrical Pin Definition

Symbol	Logic	PIN	Name/Description	Note
3.3V		5, 6, 30, 31	Power Supply of Optical Receiver and Transmitter and Control Circuits	2
5.0V		4, 32	Power Supply of Optical Receiver Frontend	2
APS		7, 8, 28, 29	Adaptive Power Supply, Supply of PHY XS and PCS Layer Devices	2
APS SENSE		27	APS Sense Output for APS Control Circuit	
APS SET		25	Feedback Input for APS, Input of APS Setting Resistor	
GND		1, 2, 3, 33, 34, 35, 36,	Common Electrical Ground	1

		37, 40, 43, 46, 49, 52, 53, 54, 57, 60, 63, 66, 69, 70		
LASI	1.2V CMOS Open Drain Output	9	Link Alarm Status Interrupt, low active, Open Drain Output Supposed to operate with 10KΩ - 22KΩ pull upon host. Logic High: Normal Operation Logic Low: Link Alarm is indicated	
MDC		18	Management Clock Input	3
MDIO		17	Management Data IO	3
MOD DETECT		14	1kΩ to Ground for APS Circuit Environment	
PRTADO	1.2V CMOS Input	23	Port Address Bit 0 (Low = 0), internally pulled up by 18kΩ	
PRTAD1	1.2V CMOS Input	22	Port Address Bit 1 (Low = 0), internally pulled up by 18kΩ	
PRTAD2	1.2V CMOS Input	21	Port Address Bit 2 (Low = 0), internally pulled up by 18kΩ	
PRTAD3	1.2V CMOS Input	20	Port Address Bit 3 (Low = 0), internally pulled up by 18kΩ	
PRTAD4	1.2V CMOS Input	19	Port Address Bit 4 (Low = 0), internally pulled up by 18kΩ	
RESERVED		13, 38, 39, 67, 68	Reserved by MSA, internally not connected	
RESERVED		26	Reserved for Avalanche Photodiode use, internally not connected	5
RESET	1.2V CMOS Input	10	Low active Reset Input 10KΩ pull-up on Transceiver Logic high = Normal Operation Logic Low = Reset asserted	
TX ON/OFF	1.2V CMOS Input	12	High active Transmitter Enable Input 10KΩ pull-up on Transceiver Logic high = Transmitter active (normal Operation) And Register Bit 1.9.0 set to low as well Logic Low = shut down of Transmitter	

Eoptolink

VENDSPECIFIC		11, 15, 16, 24	Vendor Specific Pin,. for proper operation leave unconnected	5
RX LANE0+		41	Module XAUI Output Lane 0+	4
RX LANE0-		42	Module XAUI Output Lane 0-	4
RXLANE1+		44	Module XAUI Output Lane 1+	4
RXLANE1-		45	Module XAUI Output Lane 1-	4
RX LANE2+		47	Module XAUI Output Lane 2+	4
RX LANE2-		48	Module XAUI Output Lane 2-	4
RX LANE3+		50	Module XAUI Output Lane 3+	4
RX LANE3-		51	Module XAUI Output Lane 3-	4
TX LANE0+		55	Module XAUI Input Lane 0+	4
TX LANE0-		56	Module XAUI Input Lane 0-	4
TXLANE1+		58	Module XAUI Input Lane 1+	4
TXLANE1-		59	Module XAUI Input Lane 1-	4
TX LANE2+		61	Module XAUI Input Lane 2+	4
TX LANE2-		62	Module XAUI Input Lane 2-	4
TX LANE3+		64	Module XAUI Input Lane 3+	4
TX LANE3-		65	Module XAUI Input Lane 3-	4

1) Ground connections are common for TX and RX.
2) Each connector contact is rated at 0.5A.
3) MDIO and MDC timing must comply with IEEE 802.3ae clause 45.3.
4) XAUI output characteristics comply with IEEE 802.3ae clause 47.
5) Transceivers will be MSA compliant when no signals are present on the vendor specific pins.

EOPTOLINK

Mechanical Specifications

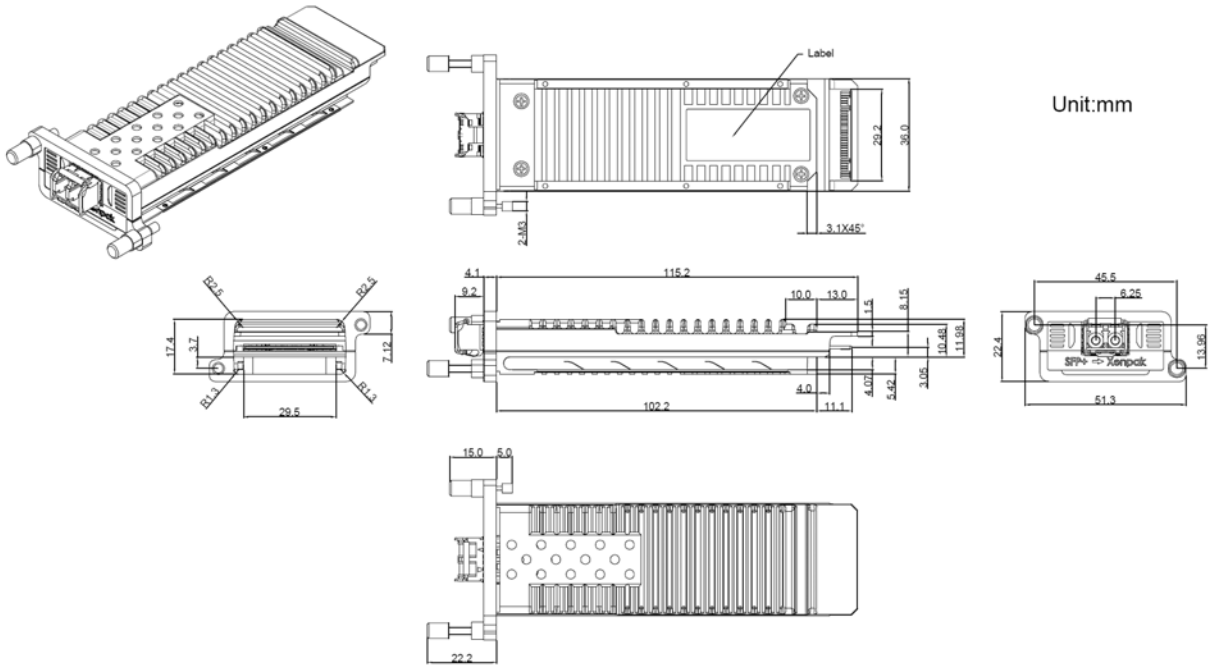

Obtaining Document

You can visit our website:

http://www.eoptolink.com

Or contact Eoptolink Technology Inc., Ltd. Listed at the end of the documentation to get the latest document.

Revision History

Revision	Initiated	Reviewed	Approved	Revision History	Release Date
V1.a	Arvin	Alex	Richard	Released.	2011-10-08
V1.b	Arvin	Alex	Richard	Add mechanical specification	2011-10-10

Notice:

Eoptolink reserves the right to make changes to or discontinue any optical link product or service identified in this publication, without notice, in order to improve design and/or performance. Applications that are described herein for any of the optical link products are for illustrative purposes only. Eoptolink makes no representation or warranty that such applications will be suitable for the specified use without further testing or modification.

Contact:

Add: Floor 5 Building 2 No. 21 Gaopeng Avenue High-Tech District CHENGDU, SICHUAN 610041 P.R. CHINA

Tel: (+86) 028-85122709 ext 808 & 809

Fax: (+86) 028-85121912

Postal: 610041

E-mail:sales@eoptolink.com

http://www.eoptolink.com

Eoptolink