EOLF-8548-02 Series

Multi-Mode 850nm 4.25Gbps
Duplex SFF Transceiver
RoHS6 Compliant

Features

- Duplex LC Multi-Mode Transceiver
- Operating Data Rate up to 4.25Gbps
- 850nm VCSEL Laser Transmitter
- 150m with 50/125µm MMF

  75m with 62.5/125µm MMF
- Single 3.3V Power supply
- LVPECL Signal Input/Output
- LVTTL Transmitter Disable Input
- LVTTL Signal Detect Output
- Small Form Factor 2X5 pin Package
- Class 1 FDA and IEC60825-1 Laser Safety Compliant
- Operating Case Temperature

  Standard: 0℃~+70℃
  Industrial:-40℃~+85℃

Applications

- 4x2x1 Fiber Channel Links
- 1000BASE-SX Ethernet
- Other Optical Link

Ordering Information

Part No.	Data Rate	Fiber	Distance	Temp.	Input/output
EOLF-8548-02*(note1)	4.25Gbps	MMF	150m	0℃~+70℃	AC/AC
EOLF-8548-02-I	4.25Gbps	MMF	150m	-40℃~+85℃	AC/AC

Note1：Standard version.

Nomenclature

EOL□-□□□-□-□-□□□□□□□□

A-BCD-E-F-GHIJKLM

No.	Description	Option
A	Package	F= SFF
B	Laser Type	Blank=Duplex BI=BI-Direction
C	Wavelength	85 =850nm；13=1310；15=1550；16=CWDM/DWDM； 13=TX:1310/RX=1550 or same wavelength； 15=TX:1550/RX=1310 or same wavelength
D	Data Rate	00=0-1M; 01=1-100M; 03=155M; 04=300M; 06=622M; 12=1.25G; 24=2.5G; 26=2.67G; 30=2.97G; 48=4.25G (Asymmetrical：TX：0=0-1M; 1=1-100M; 3=155M; 4=300M; 6=622M; 2=1.25G; 5=2.5G; 7=2.97G; 8=4.25G RX：0=0-1M; 1=1-100M; 3=155M; 4=300M; 6=622M; 2=1.25G; 5=2.5G; 7=2.97G; 8=4.25G)
E	Module Type	Blank=Transceiver, T=Single transmitter, DT=Duplex transmitter, R=Single receiver, DR=Duplex receiver, A= Asymmetrical(for transceiver data rate asymmetrical); BT= Asymmetrical(for Dual transmitter data rate asymmetrical); BR= Asymmetrical(for Dual Receiver data rate asymmetrical); S=Same Wavelength(only for BIDI module)
F	Distance*1	Blank=Link Budget Expression Series ; 850nm MMF ≤2km: 02; 1310nm/1550nm MMF≤2km: 2M; 1310nm/1550nm MMF≤1km: M; 1310nm/1550nm SMF≤2km: 02; SMF: 10*X km (X=1,2,3, …)A=100km, B=120km, C=160km, D=200km.
G	Power budget*1	XX, X=1, 2, 3 …9 and 0, for CWDM/DWDM only.
H	CWDM or DWDM Wavelength	CWDM: Refer the following table1, A~R; DWDM(100GHZ): Refer the following table2, 15~61. DWDM(50GHZ): Refer the following table3 C-Band, 100~600,
I	DDM	Blank=Without DDM; D=With DDM
J	Temp.	Blank=0~70℃; I=-40~+85℃(including the extended temperature)
k	Connector	Blank=BI SC Receptacle=Duplex LC; P=Pigtail SC Receptacle; L= BI LC Receptacle; PL = Pigtail LC Receptacle;
L	Coupled Modes/SD*2	Blank: AC/AC SD-TTL Q: AC/AC SD-PECL

		R: DC/DC SD-TTL U: DC/DC SD-PECL W: AC/DC SD-TTL X: AC/DC SD-PECL Y: DC/AC SD-TTL Z: DC/AC SD-PECL 0: AC/AC LOS-TTL 1: AC/AC LOS-PECL 2: DC/DC LOS-TTL 3: DC/DC LOS-PECL 4: AC/DC LOS-TTL 5: AC/DC LOS-PECL 8: DC/AC LOS-TTL 9: DC/AC LOS-PECL J: DC for single or duplex TX or RX k: AC for single or duplex TX or RX
M	PIN	Blank=2x5 7=2x7 A=2x10 6=2x6

*The distance and power budget should not be appeared in PN at the same time. For duplex CWDM/DWDM transceiver, power budget should be applied.

Regulatory Compliance

Feature	Standard	Performance
Electrostatic Discharge (ESD) to the Electrical Pins	MIL-STD-883G Method 3015.7	Class 1C (>1000 V)
Electrostatic Discharge to the enclosure	EN 55024:1998+A1+A2 IEC-61000-4-2 GR-1089-CORE	Compliant with standards
Electromagnetic Interference (EMI)	FCC Part 15 Class B EN55022:2006 CISPR 22B :2006 VCCI Class B	Compliant with standards Noise frequency range: 30MHz to 6GHz. Good system EMI design practice required to achieve Class B margins. System margins are dependent on customer host board and chassis design.
Immunity	EN 55024:1998+A1+A2 IEC 61000-4-3	Compliant with standards. 1KHz sine-wave, 80% AM, from 80MHz to 1GHz. No effect on transmitter/receiver performance is detectable between these limits.

Laser Eye Safety	FDA 21CFR 1040.10 and 1040.11 EN (IEC) 60825-1:2007 EN (IEC) 60825-2:2004+A1	CDRH compliant and Class I laser product. TüV Certificate No. 50135086
Component Recognition	UL and CUL EN60950-1:2006	UL File E317337 TüV Certificate No. 50135086 (CB scheme)
RoHS6	2002/95/EC 4.1&4.2 2005/747/EC 5&7&13	Compliant with standards*note2

Note2: For update of the equipments and strict control of raw materials, EOPTOLINK has the ability to supply the customized products since Jan 1st, 2007, which meet the requirements of RoHS6 (Restrictions on use of certain Hazardous Substances) of European Union.

In light of item 5 in RoHS exemption list of RoHS Directive 2002/95/EC, Item 5: Lead in glass of cathode ray tubes, electronic components and fluorescent tubes.

In light of item 13 in RoHS exemption list of RoHS Directive 2005/747/EC, Item 13: Lead and cadmium in optical and filter glass. The three exemptions are being concerned for Eoptolink's transceivers, because Eoptolink's transceivers use glass, which may contain Pb, for components such as lenses, isolators, and other components.

Product Description

The EOLF-8548-02 series multi-mode transceiver is small form factor, low power, and high performance module for serial optical data communication, such as 1000BASE Ethernet, SONET/SDH and 4 X/2 X/1 X Fiber Channel. This module is designed for multi-mode fiber and operates at a nominal wavelength of 850nm.

The transmitter section uses a multiple quantum well 850nm VCSEL and is a class 1 laser compliant according to International Safety Standard IEC-60825. The receiver section uses an integrated GaAs detector preamplifier (IDP) mounted in an optical header and a limiting post-amplifier IC. A LVPECL logic interface simplifies interface to external circuitry.

Interface information

The Signal Detect (SD, active high), normal optical input of receiver represents to a logic "1" level, which means asserted.

The following versions are available:

1. AC/AC Transceiver

Tx and Rx are AC coupling. Tx has differential 100Ω load.

Absolute Maximum Ratings

Parameter	Symbol	Min.	Max.	Unit
Storage Temperature	Ts	-40	+85	℃
Supply Voltage	Vcc	-0.5	6	V
Operating Relative Humidity		-	95	%
Soldering Temperature			260/10	□/s

*Exceeding any one of these values may destroy the device immediately.

Recommended Operating Conditions

Parameter		Symbol		Min.	Typical	Max.	Unit
Operating Case Temperature		T_A	EOLF-8548-02	0		+70	℃
			EOLF-8548-02-I	-40		+85	
Power Supply Voltage		Vcc		3.15	3.3	3.47	V
Power Supply Current(DC)		Icc			160	200	mA
Date Rate	4XFC				4.25		Gbps

Performance Specifications - Electrical

Parameter		Symbol	Min.	Typ.	Max	Unit	Notes
Transmitter							
LVPECL Inputs(Differential)		Vin	400		2000	mVpp	AC Coupled Inputs*(note3)
Input Impedance (Differential)		Zin	85	100	115	ohm	Rin > 100 kohm @ DC
TX_Dis	Disable		2		Vcc+0.3	V	
	Enable		0		0.8		
TX_FAULT	Fault		2		Vcc+0.3	V	
	Normal		0		0.5		
Receiver							
CML Outputs (Differential)		Vout	400		1600	mVpp	AC Coupled Outputs*(note3)
Output Impedance (Differential)		Zout	85	100	115	ohm	
RX_SD	Normal		-1.1		-0.74	V	
	SD		-2.0		-1.58	V	

Performance Specifications -Optical

Parameter	Symbol	Min.	Typical	Max.	Unit
50µm Core Diameter MMF			150		m
Data Rate		1	4.25		Gbps
Transmitter					
Centre Wavelength	λ_C	830	850	860	nm
Spectral Width (RMS)	$\Delta\lambda$			0.85	nm
Average Output Power*(note4)	Pout	-9		0	dBm
Extinction Ratio*(note5)	ER	9			dB
Deterministic Jitter@4.25Gbps	D_J	-	-	28.2	ps
Relative Intensity Noise	RIN	-	-	-117	dB/Hz
Optical Rise/Fall Time (20%~80%)	tr/tf			90	ps
TX_Disable Assert Time	t_off			10	us
Eye diagram*(note7)		Compliant with ANSI FC-PI specification			

Receiver					
Center Wavelength	λ_C	770		860	nm
Receiver Sensitivity*(note6)	Pmin			-12.5	dBm
Maximum Input Power (Saturation)	Pmax	-3	-	-	dBm
SD De-Assert	SDD			-14	dBm
SD Assert	SDA	-35			dBm
SD Hysteresis*(note8)		0.5			dB

Note3: LVPECL logic, internally AC coupled.

Note4: Output is coupled into a 50/125μm multi-mode fiber.

Note5: Filtered, measured with a PRBS 2^7-1 test pattern @4250Mbps.

Note6: Measured with a 2^7-1 PRBS and BER less than 1E-12.

Note7: Eye Pattern Mask

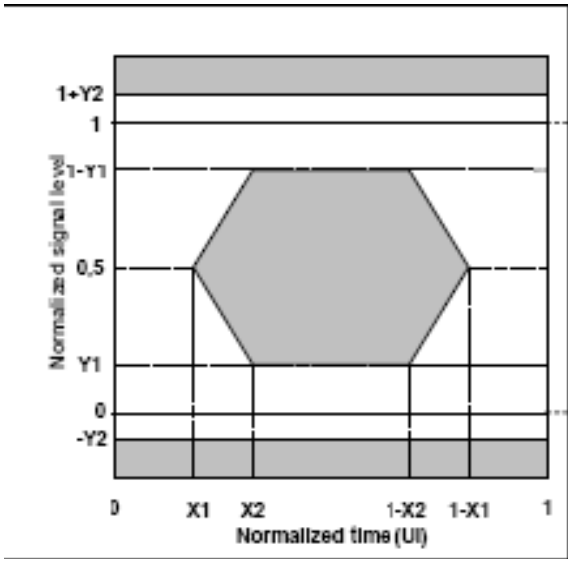

Note8: SD Hysteresis

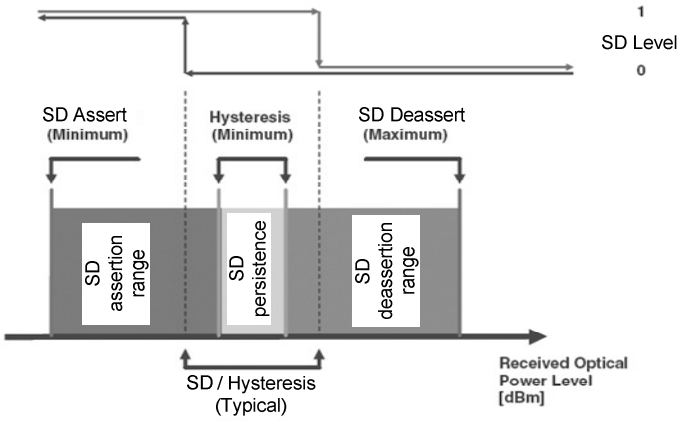

Functional Description of Transceiver

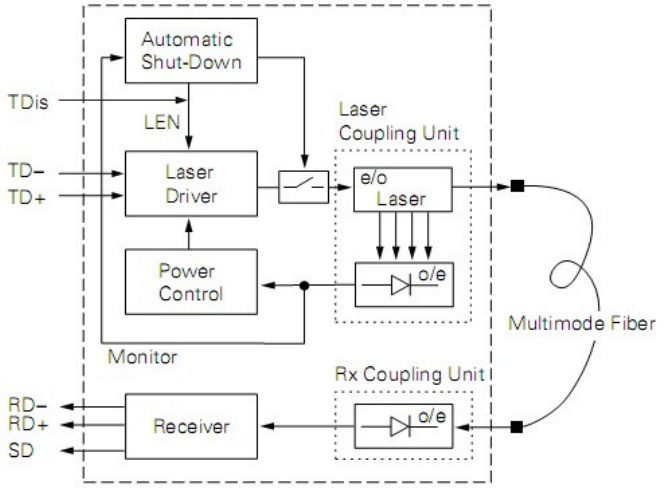

SFF Transceiver Electrical Pad Layout

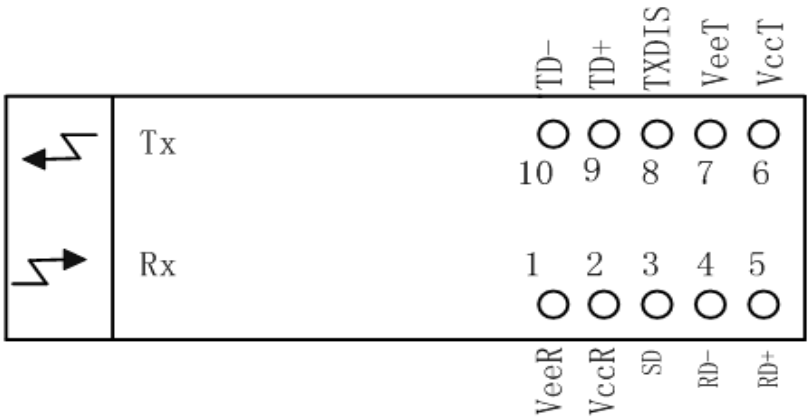

Case isolated from circuit ground.

Pin Function Definitions

Pin No.	Name	Function
	MS	Mounting Studs, Case isolated from circuit ground
1	VeeR	Receiver Signal Ground
2	VccR	3.3V DC power for receiver section
3	SD	Signal Detect Output (LVTTL) “1” - “Signal valid”, “0” – “Lose of signal”
4	RD-	Received Data Out Bar (LVPECL), without termination inside
5	RD+	Received Data Out (LVPECL), without termination inside
6	VccT	3.3V DC power for transmitter section
7	VeeT	Transmitter Signal Ground

8	TXDIS	Transmitter Disable (LVTTL), “1” – Disable, “0” – Enable
9	TD+	Transmitter Data In (LVPECL), without termination inside
10	TD-	Transmitter Data In Bar (LVPECL), without termination inside

Recommend Circuit Schematic

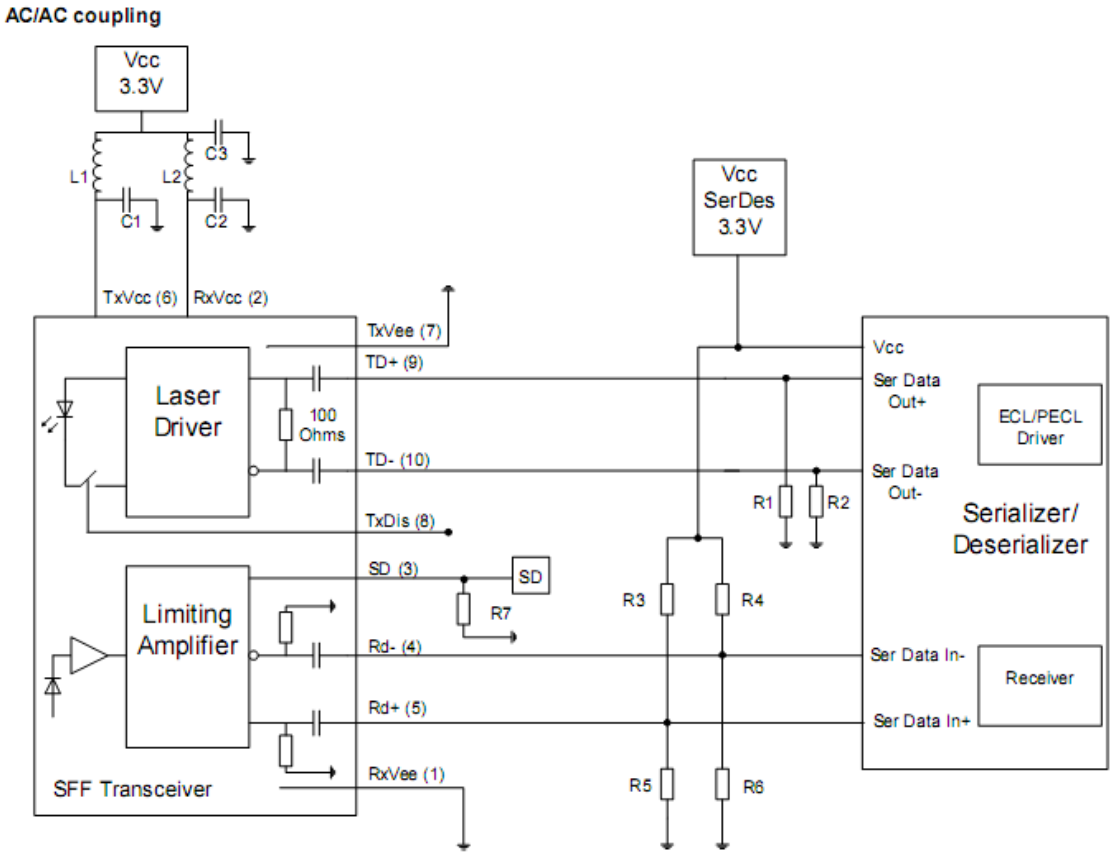

L1, L2: 1...4.7 µH
C1, C2, C3: 4.7...10 µF
R1, R2: biasing of outputs depending on Serializer
R3, R4: 127 Ohms
R5, R6: 80 Ohms
R7: 510 Ohms for PECL signal detect, open for TTL
Place R1/2/3/4/5/6 as close to SerDes chip as possible

Mechanical Specifications

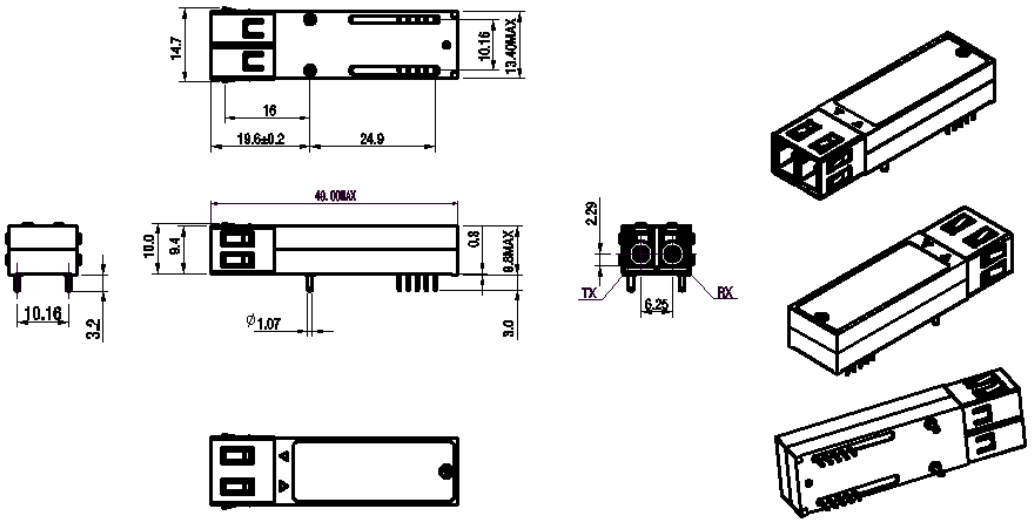

Class 1 Labels

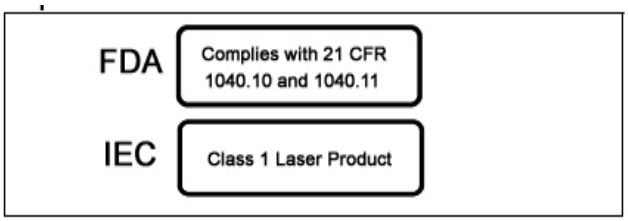

Laser Emission Data

Wavelength	850nm
Total output power (as defined by FDA: 7mm aperture at 20cm distance)	<0.076mW
Total output power (as defined by IEC: 7mm aperture at 10cm distance)	<0.778mW
Beam divergence	12°

Laser Emission

Obtaining Document

You can visit our website:

http://www.eoptolink.com

Or contact Eoptolink Technology Inc., Ltd. listed at the end of the documentation to get the latest document.

Revision History

Revision	Initiated	Reviewed	Approved	DCN	Release Date
V3.a	Cathy	Kelly		Released.	Mar 24, 2008
V4.a	David	Kelly		Update PN&LOGO.	Sep 30, 2011

Notice:

Eoptolink reserves the right to make changes to or discontinue any optical link product or service identified in this publication, without notice, in order to improve design and/or performance. Applications that are described herein for any of the optical link products are for illustrative purposes only. Eoptolink makes no representation or warranty that such applications will be suitable for the specified use without further testing or modification.

Contact:

Add: Floor 5, Building 2, No. 21 Gaopeng Avenue, High-Tech District, CHENGDU, SICHUAN 610041 P.R. CHINA

Tel: (+86) 028-85124308 ext 801

Fax: (+86) 028-85121912

Postal: 610041

E-mail:sales@eoptolink.com

http://www.eoptolink.com